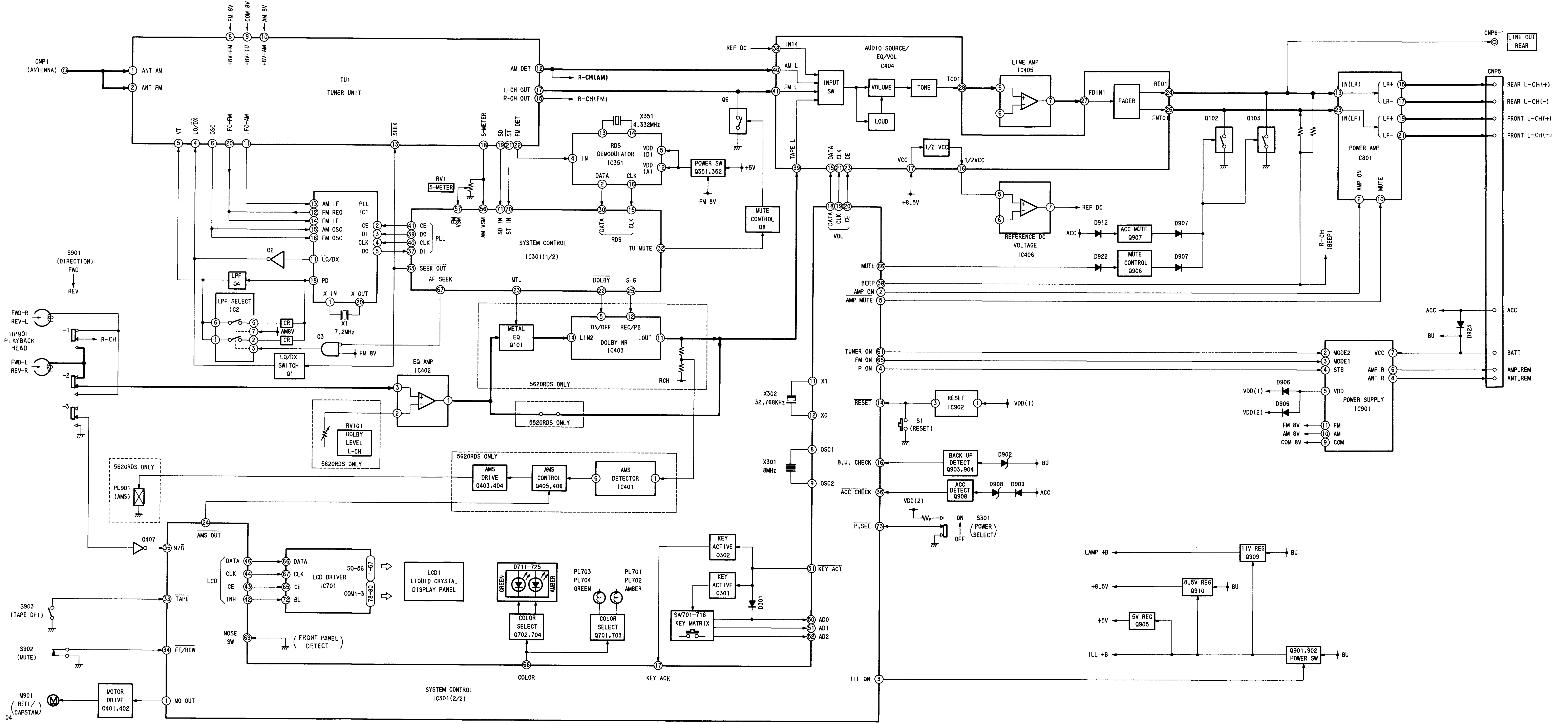
CNP1 (ANTENNA)
ANT AM
ANT FM
TU1 TUNER UNIT
+8V-FM
+8V-TU
+8V-AM
FM 8V
COM 8V
AM 8V
AM DET
R-CH(AM)
L-CH OUT
R-CH OUT
R-CH(FM)
VT
LO/DX
OSC
IFC-FM
IFC-AM
SEEK
S-METER
SD
ST
FM DET
X351 4.332MHz
RDS DEMODULATOR IC351
IN
VDD (D)
VDD (A)
DATA
CLK
POWER SW Q351,352
+5V
FM 8V
RV1 S-METER
AM IF
FM REQ
FM IF
AM OSC
FM OSC
PLL IC1
CE
DI
CLK
DO
LO/DX
PD
X IN
X OUT
X1 7.2MHz
Q2
LPF Q4
LPF SELECT IC2
CR
AM8V
CR
Q3
FM 8V
LO/DX SWITCH Q1
FM VSM
AM VSM
SD IN
ST IN
SYSTEM CONTROL IC301(1/2)
PLL
SEEK OUT
AF SEEK
MTL
DOLBY
SIG
RDS
TU MUTE
MUTE CONTROL Q8
Q6
TAPE L
S901 (DIRECTION) FWD REV
FWD-R REV-L
HP901 PLAYBACK HEAD
FWD-L REV-R
R-CH
METAL EQ Q101
ON/OFF
REC/PB
LIN2
LOUT
DOLBY NR IC403
RCH
5620RDS ONLY
EQ AMP IC402
5520RDS ONLY
RV101 DOLBY LEVEL L-CH
5620RDS ONLY
AMS DRIVE Q403,404
AMS CONTROL Q405,406
AMS DETECTOR IC401
5620RDS ONLY
PL901 (AMS)
AMS OUT
Q407
N/R
S903 (TAPE DET)
TAPE
S902 (MUTE)
FF/REW
M901 REEL/ CAPSTAN
MOTOR DRIVE Q401,402
MO OUT
04
LCD
DATA
CLK
CE
INH
LCD DRIVER IC701
SO-56
COM1-3
1-57
78-80
LCD1 LIQUID CRYSTAL DISPLAY PANEL
D711-725
GREEN
AMBER
COLOR SELECT Q702,704
PL703 PL704 GREEN
PL701 PL702 AMBER
COLOR SELECT Q701,703
NOSE SW
(FRONT PANEL DETECT)
COLOR
KEY ACK
SYSTEM CONTROL IC301(2/2)
KEY ACTIVE Q302
KEY ACTIVE Q301
SW701-718 KEY MATRIX
D301
KEY ACT
AD0
AD1
AD2
X302 32.768KHz
X1
X0
X301 8MHz
OSC1
OSC2
REF DC
IN14
AM L
FM L
INPUT SW
VOLUME
LOUD
TONE
AUDIO SOURCE/ EQ/VOL IC404
TC01
DATA
CLK
CE
VOL
VCC
1/2 VCC
1/2VCC
+8.5V
LINE AMP IC405
REFERENCE DC VOLTAGE IC406
REF DC
FDIN1
FADER
RE01
FNT01
Q102
Q103
ACC
D912
ACC MUTE Q907
D907
D922
MUTE CONTROL Q906
D907
R-CH (BEEP)
IN(LR)
IN(LF)
LR+
LR-
LF+
LF-
POWER AMP IC801
AMP ON
MUTE
CNP6-1
LINE OUT REAR
CNP5
REAR L-CH(+)
REAR L-CH(-)
FRONT L-CH(+)
FRONT L-CH(-)
MUTE
BEEP
AMP ON
AMP MUTE
ACC
ACC
BU
D923
TUNER ON
FM ON
P ON
MODE2
MODE1
STB
VCC
AMP R
ANT R
BATT
AMP.REM
ANT.REM
VDD
D906
VDD(1)
VDD(2)
POWER SUPPLY IC901
FM 8V
AM 8V
COM 8V
FM
AM
COM
RESET
RESET IC902
VDD(1)
S1 (RESET)
B.U. CHECK
BACK UP DETECT Q903,904
D902
BU
ACC CHECK
ACC DETECT Q908
D908
D909
ACC
VDD(2)
P.SEL
ON
OFF
S301 (POWER SELECT)
LAMP +B
11V REG Q909
BU
+8.5V
8.5V REG Q910
BU
+5V
5V REG Q905
ILL +B
Q901,902 POWER SW
BU
ILL ON

PRINTED WIRING BOARDS – Refer to page 15 for Semiconductor Lead Layouts.

[MAIN BOARD]
[AMPLIFIER BOARD]
[SWITCH BOARD] (SIDE A)
[SWITCH BOARD] (SIDE B)
[SWITCH BOARD]
[MUTE SWITCH BOARD]
CNP1 (ANTENNA)
(CHASSIS)
IC901
IC404
IC405
IC406
IC1
IC2
IC403
IC351
IC401
IC601
IC701
5620RDS MODEL
S1 (RESET)
S301 (POWER SELECT)
CNP3
CNP6 (LINE OUT REAR)
CNP4
CNP5
1-651-004-
1-651-005-
1-651-006-
FRONT L CH(−) WHT/BLK
REAR L CH(−) GRN/BLK
FRONT L CH(+) WHT
REAR L CH(+) GRN
FRONT R CH(−) GRY/BLK
FRONT R CH(+) GRY
REAR R CH(−) VIO/BLK
REAR R CH(+) VIO
AMP, REM
F902 15A
BATT
F901 3A
GND
Acc
ANT REM
BLU/WHT BLU RED BLK YEL
HP901 PLAYBACK HEAD
PL901 (AMS)
S903 (TAPE SET) OUT IN
S902 (MUTE)
M901 REEL/CAPSTAN
SW701 TUNER
D714 (SEEK/MANU)
SW704 SEL
D723 (OFF)
D724 (AF/TA)
D725 (TUNER)
D715 (SEEK/MANU)
D706
D711 (SEL)
D712 (−)
D713 (MUTE)
D720 (6)
D721 (5)
SW713 OFF
SW702 AF/TA
SW703
SW705
SW706 MUTE
SW714 M SCAN BTM
SW715 SEEK LOOP
SW717 SEEK/MANU
BACK LIGHT
LCD701 LIQUID CRYSTAL DISPLAY

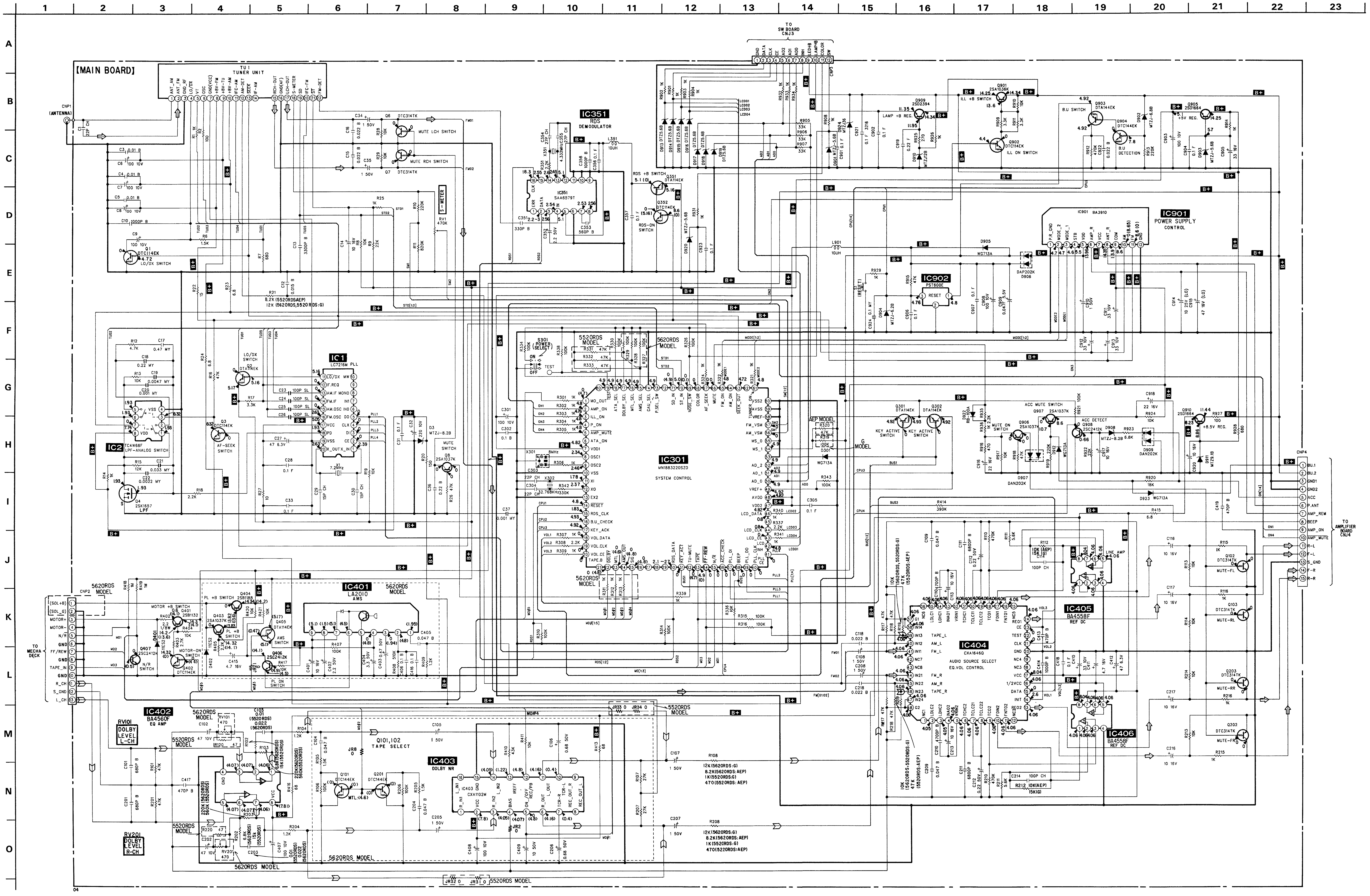
【MAIN BOARD】
TU1 TUNER UNIT
CNP1 (ANTENNA)
TO SW BOARD CNJ3
IC351 RDS DEMODULATOR
IC351 SAA6579T
Q351 RDS +B SWITCH DTA114EK
Q352 DTC114EK RDS-ON SWITCH
Q6 DTC314TK MUTE LCH SWITCH
Q7 DTC314TK MUTE RCH SWITCH
S-METER
RV1 470K
Q1 DTC114EK LO/DX SWITCH
IC1 LC7216M PLL
Q2 DTA114EK LO/DX SWITCH
Q3 DTC114EK AF-SEEK SWITCH
IC2 TC4W66F LPF-ANALOG SWITCH
Q4 2SK1657 LPF
Q8 2SA1037K MUTE SWITCH
D3 MTZJ-8.2B
IC301 MN188322OSZD SYSTEM CONTROL
S301 POWER SELECT
5520RDS MODEL
5620RDS MODEL
AEP MODEL
G MODEL
IC902 PST600E RESET
IC901 BA3910 POWER SUPPLY CONTROL
Q901 2SA1036K ILL +B SWITCH
Q902 DTC144EK ILL ON SWITCH
Q909 2SD2394 LAMP +B REG.
Q903 DTA144EK B.U SWITCH
Q904 DTC144EK B.U DETECTION
Q905 2SD1664 +5V REG.
Q301 DTA114EK KEY ACTIVE SWITCH
Q302 DTC114EK KEY ACTIVE SWITCH
Q906 2SA1037K MUTE ON SWITCH
Q907 2SA1037K ACC MUTE SWITCH
Q908 2SC2412K ACC DETECT
Q910 2SD1664 +8.5V REG.
CNP4
TO AMPLIFIER BOARD CNJ4
BU.1
BU.2
GND1
GND2
ACC
P.ANT
AMP_REM
BEEP
AMP_ON
AMP_MUTE
R-L
F-L
S_GND
F-R
R-R
CNP2
TO MECHA DECK
(SOL+B)
(SOL_G)
MOTOR+
MOTOR-
N/R
GND
FF/REW
TAPE_IN
GND
R_CH
S_GND
L_CH
IC401 LA2010 AMS
Q401 2SB1132 MOTOR +B SWITCH
Q402 DTC114EK MOTOR-ON SWITCH
Q403 2SA1037K PL +B SWITCH
Q404 2SB1188
Q405 DTA114EK AMS SWITCH
Q406 2SC2412K PL ON SWITCH
Q407 2SC2412K N/R SWITCH
IC402 BA4560F EQ AMP
RV101 DOLBY LEVEL L-CH
RV201 DOLBY LEVEL R-CH
Q101,102 TAPE SELECT
IC403 DOLBY NR
IC403 CXA1102M
IC404 CXA1646Q AUDIO SOURCE SELECT EQ.VOL CONTROL
IC405 BA4558F REF DC
IC406 BA4558F REF DC
LINE AMP
Q102 DTC314TK MUTE-FL
Q103 DTC314TK MUTE-RL
Q203 DTC314TK MUTE-RR
Q202 DTC314TK MUTE-FR

No

[SW BOARD]
LCD1
LIQUID CRYSTAL
DISPLAY PANEL
IC701
TC9240F
LCD DRIVER
D711—725
CL-155Y/PG-CD-TU
D706
DAP202K
BACK LIGHT
GREEN-LAMP SWITCH
GREEN-LED SWITCH
AMBER-LAMP SWITCH
AMBER-LED SWITCH
Q703 DTD113EK
Q704 DTD113EK
Q701 DTD113EK
Q702 DTD113EK
TUNER
AF/TA
SEL
MUTE
OFF
M.SCAN BTM
SENS LOUD
DSPL
SEEK/MANU −
SEEK/MANU +
B+
CNJ3
SW
COLOR
LAMP+B
LED+B
INH
AD0
AD1
AD2
CE
CLK
DATA
GND
CNP3
MECHA DECK
M901 (REEL/CAPSTAN)
[MUTE SWITCH BOARD]
S902 (MUTE)
FF/REW
S903 (TAPE DET) OUT IN
HP901 PLAYBACK HEAD
FWD-R REV-R
FWD-L REV-R
S901 (DIRECTION)
YEL
RED
BLK
5620RDS MODEL
PL901 (AMS)
[SWITCH BOARD]
CN52
CNP2
SOL +B
SOL G
MOTOR +
MOTOR −
N/R
GND
FF/REW
TAPE IN
R CH
S GND
L CH
[MAIN BOARD]
CNP4
CNJ4
B.U1
B.U2
GND1
GND2
ACC
P.ANT
AMP_REM
BEEP
AMP_ON
AMP_MUTE
R_L
F_L
S.GND
F_R
R_R
IC801
HA13150A
POWER AMP
CNP5
CHOKE COIL
F902 15A
F901 3A
BATT
GND
ACC
ANT.REM
AMP.REM
REAR RCH(+)
REAR RCH(−)
FRONT RCH(+)
FRONT RCH(−)
REAR LCH(+)
FRONT LCH(+)
REAR LCH(−)
FRONT LCH(−)
CNP6
LINE OUT REAR
[AMPLIFIER BOARD]
04

Note :

- All capacitors are in μF unless otherwise noted. pF : μμF 50WV or less are not indicated except for electrolytics and tantalums.
- All resistors are in Ω and 1/4 W or less unless otherwise specified.
- **B+** : B+ Line
- Power voltage is dc 14.4V and fed with regulated dc power supply from BATT and ACC terminals.
- Voltage is dc with respect to ground under no-signal (detuned) conditions.
- no mark: FM
- Voltages are taken with a VOM (Input Impedance 10MΩ). Voltage variations may be noted due to normal production tolerances.
- Signal path.
  ⇨ : FM
  ∑ : PB